Office of Neighborhood Services City of Richland Hills, Texas

Memorandum

To: Honorable Mayor Bill Agan and members of the Richland Hills City Council

From: Scott Mitchell, Director of Neighborhood Services

Date: January 20, 2014

Subject: Approval of Electronic Message Sign - 6931 Baker Boulevard

---

Council Action Requested:

Consider approval of a sign with an electronic message board for Faith Creek Church, 6931 Baker Boulevard.

Background Information:

Faith Creek Church has submitted a Sign Permit Application to erect a sign with an electronic message board at their location of 6931 Baker Boulevard. The application and associated drawings and submittal information were reviewed and approved as per Chapter 62-173 of the Richland Hills Municipal Code of Ordinances, by our consultant Erica Craycraft with Freese and Nichols.

Chapter 62-173 also stipulates electronic message boards must be approved by Council.

Board/Citizen Input: N/A

Financial Impact: N/A

Staff Contacts:

Scott Mitchell
Director of Neighborhood Services
smitchell@richlandhills.com

Attachments: Permit Application and Submittals

CITY OF RICHLAND HILLS, TEXAS

3200 DIANA DRIVE · RICHLAND HILLS, TX 76118

PLANNING AND COMMUNITY DEVELOPMENT

Sign Permit Application

#SP2013-2272

☐ Banner ☒ Monument Sign ☐ Attached/Wall Mounted ☐ Portable ☐ Pole

Applicant/Business Owner's Information

Name FAITH CREEK CHURCH (formerly Victory AG)

Address 6931 Baker Blvd

Business Number 817.595.2064 Contact Name Randy Sheridan

Contact Number 817.991.5025 Contact E-mail drsheridan@aol.com

Signature Rev Randy Sheridan Date 11/11/13

Contractor Information

Name Jeff Dunklin / Checkmark Constr.

Address 5631 Stratum Dr. Ft. Worth, Tx. 76137

Number 817.886.7841 E-mail jdunklin@checkmarkconstruction.com

Proposed Sign Information

Sign Address/Location 6931 Baker Blvd. Sign Area

Will the proposed sign require electricity? ☒ Yes ☐ No

If yes, is electricity ☐ Existing or ☒ New is required?

What is the estimated cost of the sign including installation? $12,000.-

Will the sign be taking up any vehicle parking spaces? ☐ Yes; How many?____ ☒ No

Will the sign block the fire lane? ☐ Yes ☒ No

For Office Use:

Received [illegible] Fee Paid 309.25 Permit # 73596

Approved by ____ Date 11/11/2013

Comments:

S:\PLANNING AND COMMUNITY DEVELOPMENT\TEMPLATES\SIGN PERMIT APPLICATION.DOCX

Entered 11-18-13 [illegible]

FREESE AND NICHOLS
Innovative approaches
Practical results
Outstanding service

The Tower • 2711 N. Haskell Avenue, Suite 3300 • Dallas, Texas • 214-217-2200 • FAX 214-217-2201 www.freese.com

November 20, 2013

City of Richland Hills
Approval of an Electronic Message Center Sign at 6931 Baker Boulevard

The property located at 6931 Baker Boulevard is currently utilized by Faith Creek Church. The applicant has requested a permit to install a sign on the property. The overall sign meets the City's criteria; however, City Council approval is required due to the LED portion of the sign (indicated by the red outline on the illustration).

Sec. 62-173. Electronic Message Centers paragraph (c) of the City's Code of Ordinances establishes the following criteria:

> Such permitted electronic message center may flash, change color and scroll, regardless of other provision of this chapter. Any electronic message center may be either single or double sided. The area of such sign shall not exceed 40 square feet per side. Such sign may be either a pole sign or a monument sign, and shall conform to the appropriate height requirements for such type of sign. Any permitted electronic message center must be constructed of durable material, be in good condition, and placed outside of any right-of-way or easement, must comply with all setback regulations, may not be located in any public right-of-way or visibility triangle, and, when viewed from any public right-of-way, may not block visibility of any traffic control or device, or of any portion of a public right-of-way. Only one electronic message center shall be allowed on any lot.

The sign meets the area, height, setback, and visibility triangle requirements. We recommend approval of the Electronic Message Center sign.

Please contact me if you have any questions.

Thank you,

Erica Craycraft
egc@freese.com
(214) 217-2377

FAITH CREEK CHURCH

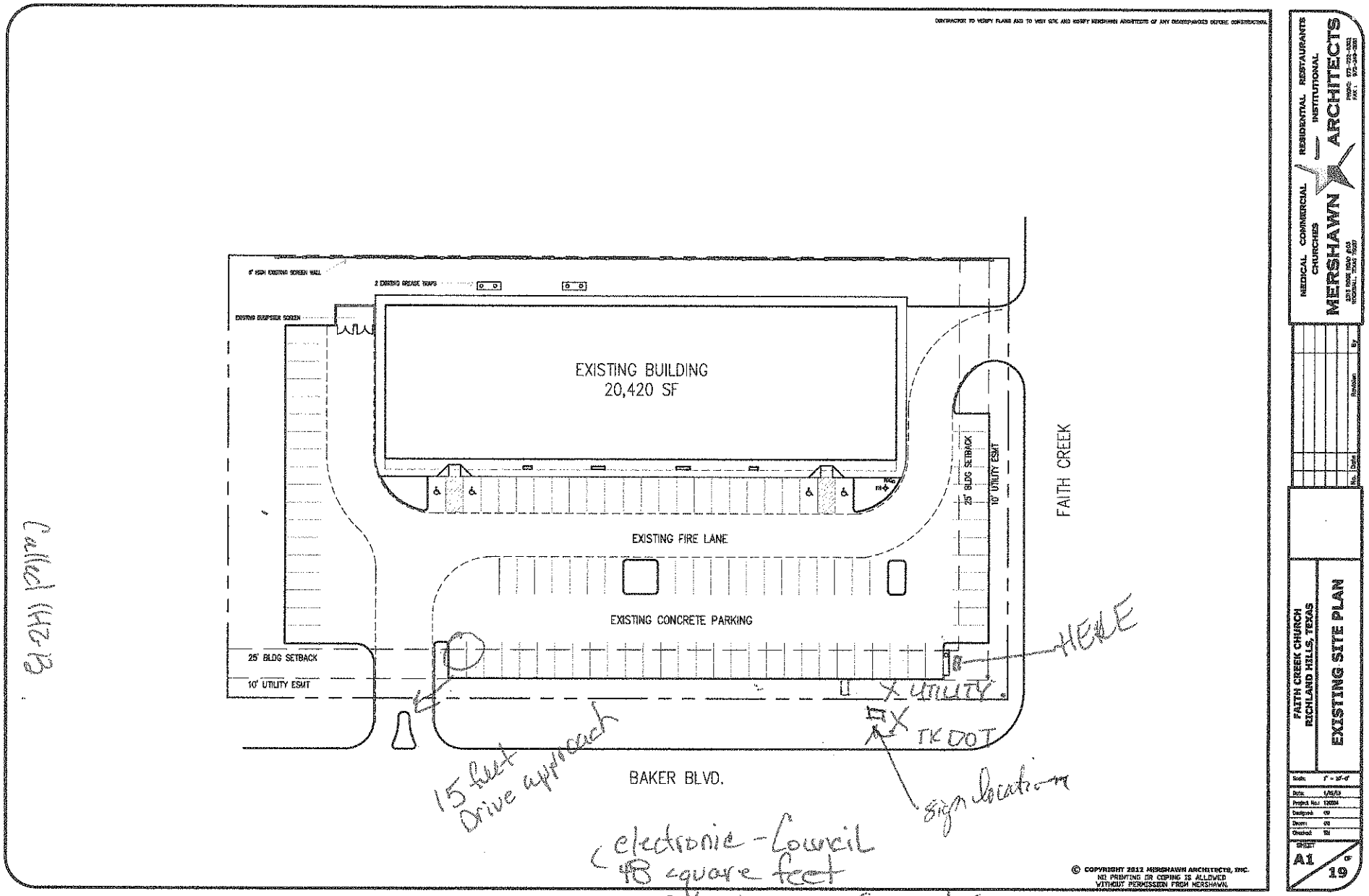

Called HZB

electronic - Council
48 square feet
No Right-of-way or Easement

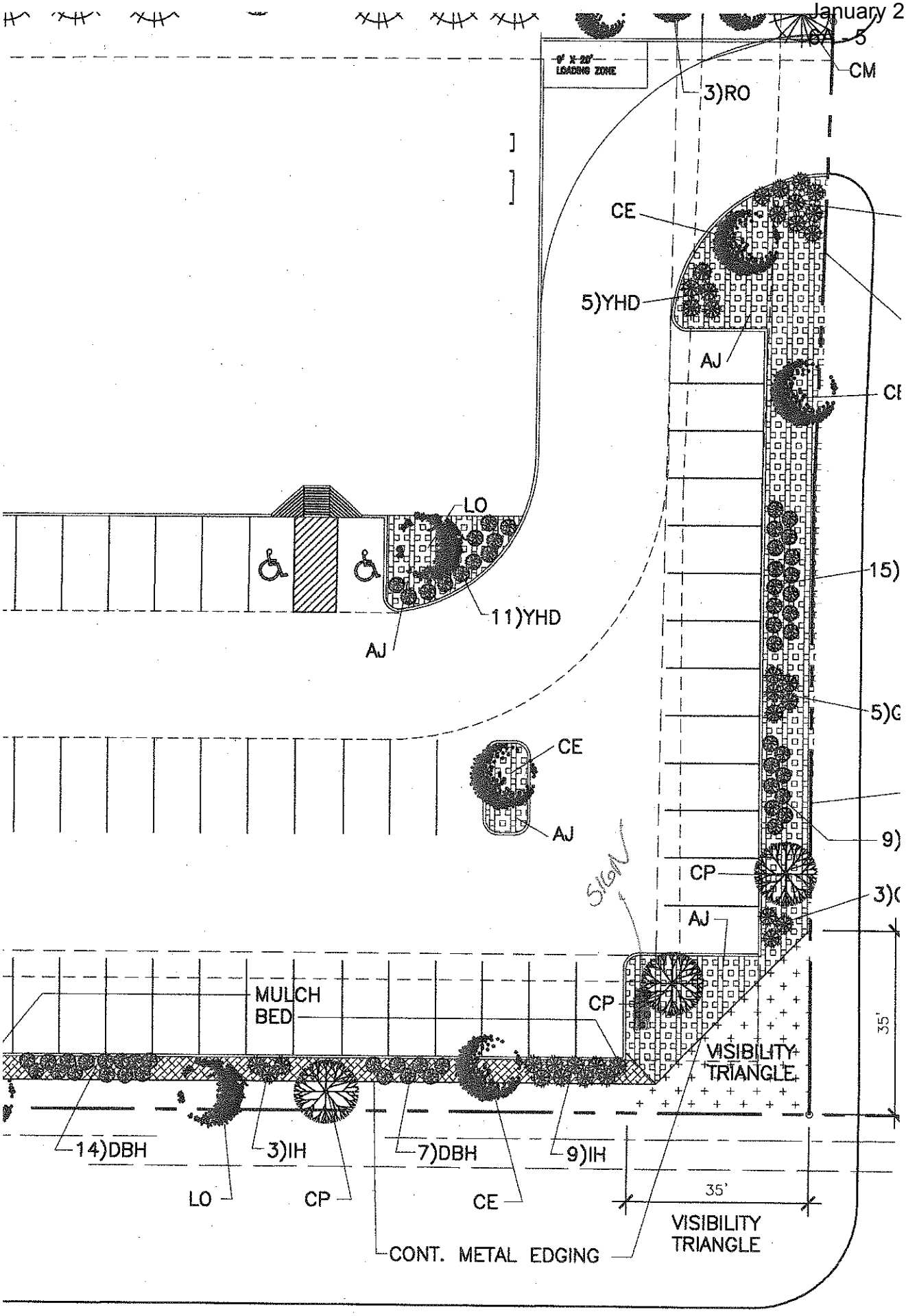

) - WEST BOUND LANES

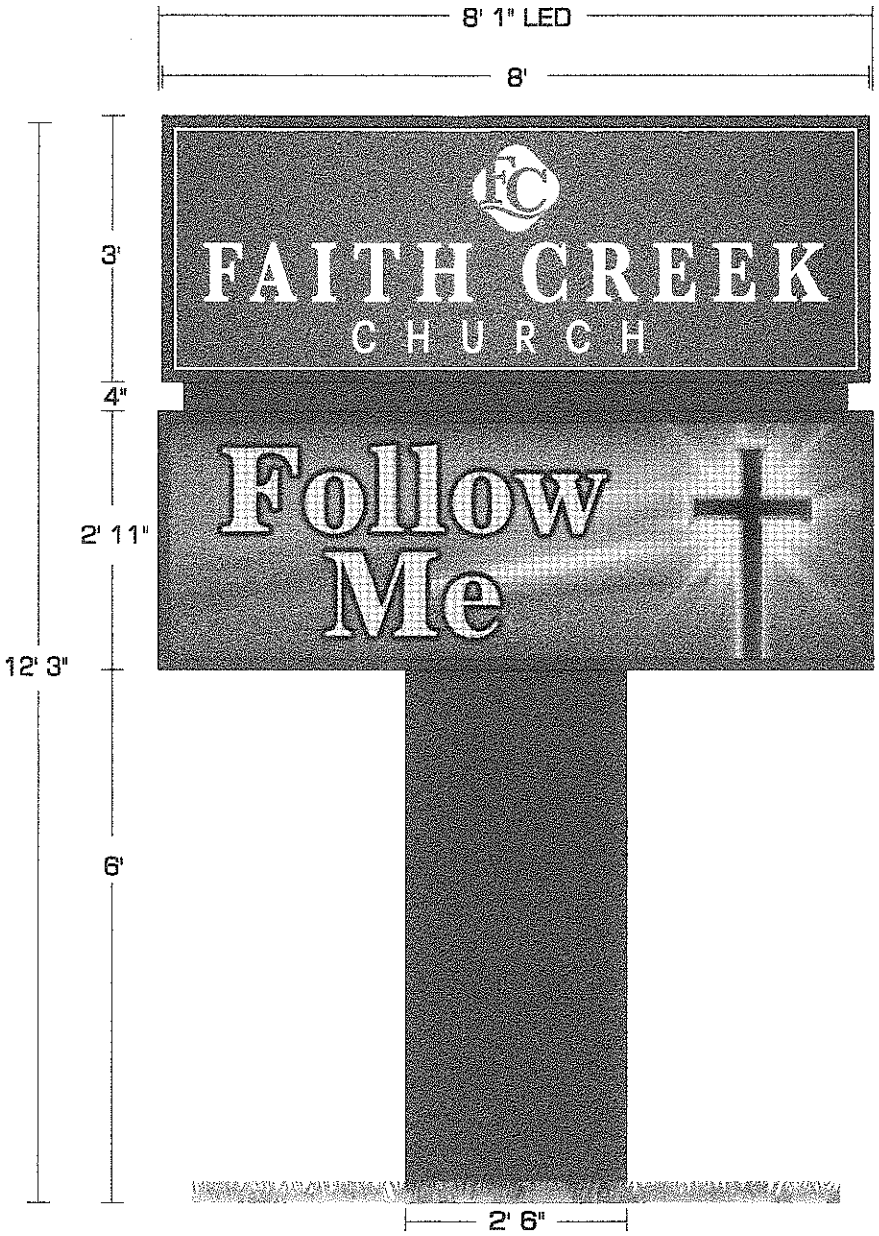

DAYSTAR EXP COLOR 25mm 32x96
ID CABINET: 3'x8'
LED CABINET: 2' 11" x 8' 1"
CABINET: SPARTAN BRONZE
PHOTO REALISTIC BACKGROUND
DRAFT: WHITE

45 YEARS of Excellence

stewartsigns
America's Premier Sign Company

PH. 1-800-237-3928 FAX 1-800-485-4280

1/2"=1' SK. #794802-1c CUST. #3037560 9/23/13 L/JMOORE SOLD

ORIGINAL DESIGN DO NOT DUPLICATE

DUE TO THE PHYSICAL LIMITATIONS OF THE PAPER AND INK-BASED PRINTING PROCESS THIS CUSTOM ARTWORK IS NOT INTENDED TO PROVIDE AN EXACT MATCH BETWEEN INK, VINYL, PAINT, OR LED COLOR. ARTIST'S RENDITION OF BRICKWORK, MASONRY AND LANDSCAPING IS NOT INCLUDED IN THE PROPOSAL. ANY MEASUREMENTS SHOWN ARE APPROXIMATIONS; DIMENSIONS OF FINAL PRODUCT MAY VARY.

APPROVED AS SHOWN.

X _____ DATE _____ 1. _____

APPROVED WITH LISTED CHANGES 2. _____

X _____ DATE _____ 3. _____

SPECIFICATIONS

1. 12" x 12" x 3/4" STEEL BASE PLATES, 2 REQUIRED.
2. 3/4" x 30" THREAD RODS, 8 REQUIRED.
   TAPE THE EXPOSED TOP OF THE THREADED RODS FOR PROTECTION AGAINST CONCRETE.
3. #5 REBAR OR BETTER, TIED AT EACH JOINT. SUPPLIED BY CUSTOMER.
4. CONDUIT, SUPPLIED BY CUSTOMER.

NOTE:

- DESIGN FACTOR MEETS OR EXCEEDS 120 MPH WIND LOAD.
- SIGN AND FOOTER SPECIFICATIONS MAY VARY BY ENGINEER.
- 3,000 PSI CONCRETE - LESS THAN 2.75 CUBIC YARDS NECESSARY.
- SIGNS SHALL BE GROUNDED BY CONNECTION TO THE EQUIPMENT GROUNDING CONDUCTOR OF THE SUPPLY BRANCH CIRCUIT.

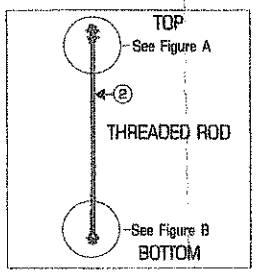

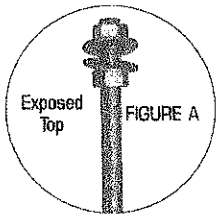

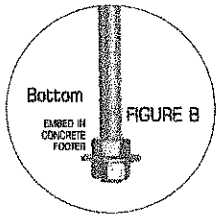

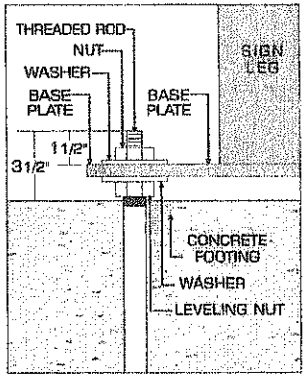

THREADED ROD DETAIL

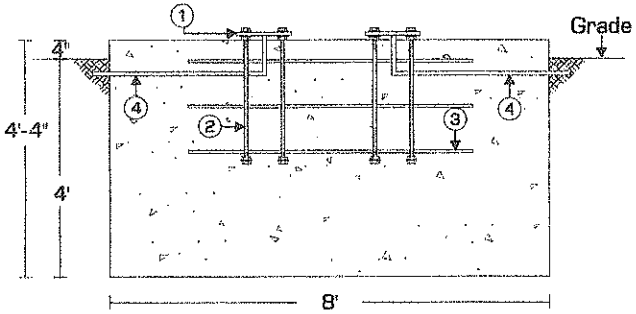

FOOTER - FRONT VIEW
Not to Scale

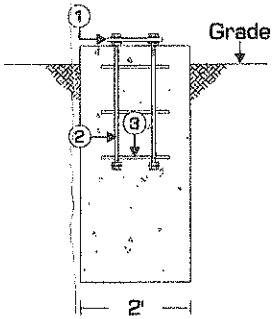

FOOTER - SIDE VIEW
Not to Scale

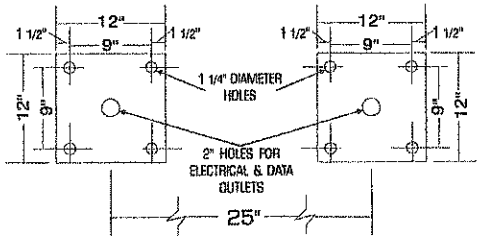

Data cable (if applicable) must be placed in separate conduit from electrical

BASE PLATE DETAIL
Not to Scale

Designed to be printed on 8½" x 14" paper.

stewartsigns PH. 1-800-237-3928 FAX 1-800-485-4280	Date: 10-01-13 Drawn by: LLN	revA 8-21-13 revB 9-04-13	J.M.S. TEMPLATE MUST BE USED TO SET THREADED RODS INTO CONCRETE			
	FT-12x12		Sketch #: 794802-1C	Customer #: 3037560	Customer Name: Faith Creek	Customer Address: N/A